trophon®

Printer Cart Mount 2

nanosonics
Infection Prevention. For Life.

L03058 4.0

Nanosonics Limited
3-5 Thomas Holt Drive,
Macquarie Park,
NSW 2113, Australia
+61 2 8063 1600
customerservice@nanosonics.com.au
www.nanosonics.com.au

EC REP

Nanosonics Europe GmbH
Poppenbuetteler Bogen 66
22399 Hamburg - Germany
+49 40 46856885
customerservice@nanosonics.eu
www.nanosonics.eu

USA Contact:
Nanosonics, Inc.
7205 E. 87th St
Indianapolis, IN 46256, USA
1-844-879-7466
customerservice@nanosonics.us
www.nanosonics.us

Made in China

REF N05038

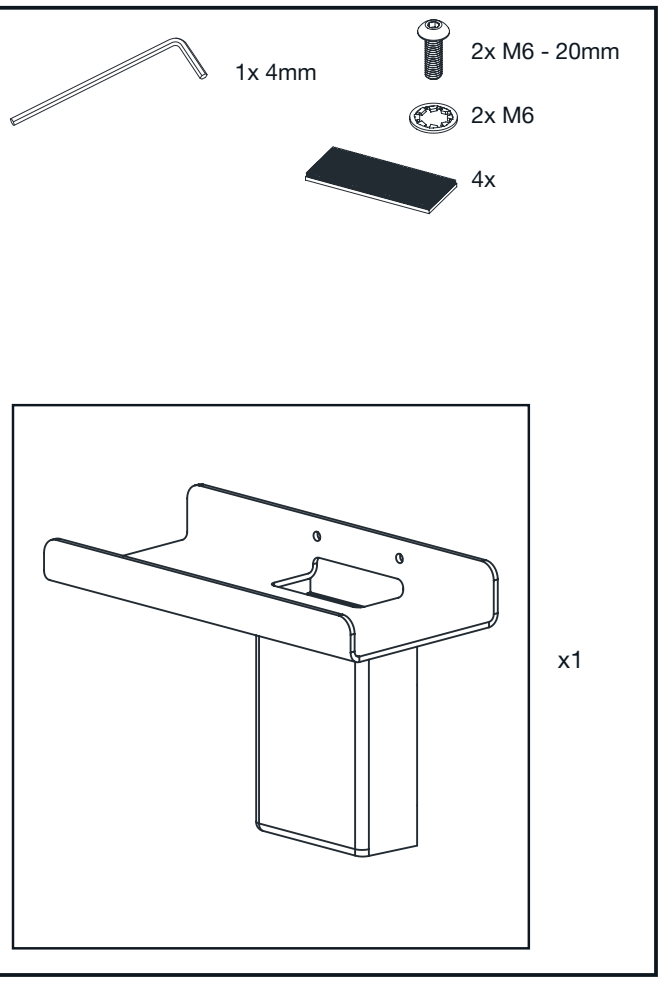

1

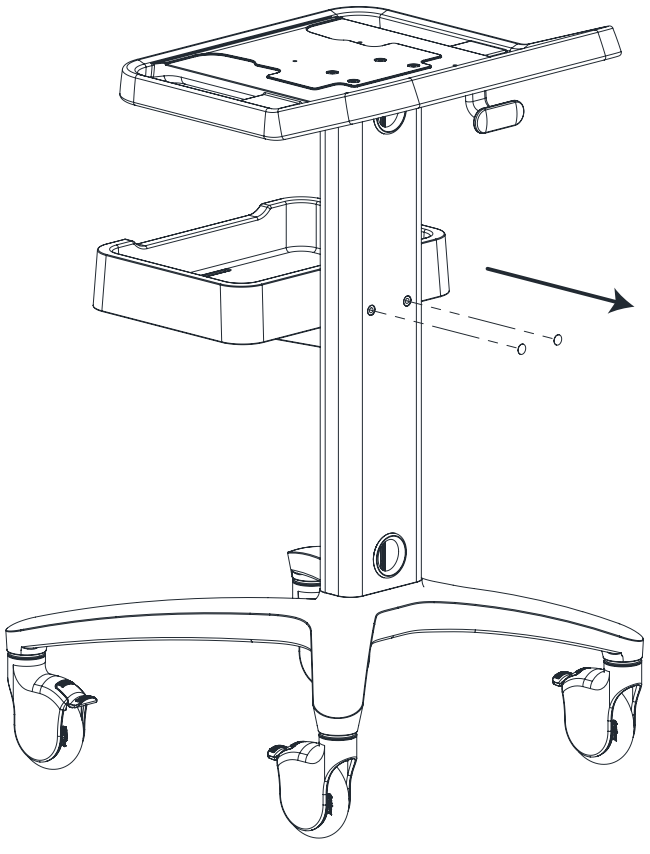

2

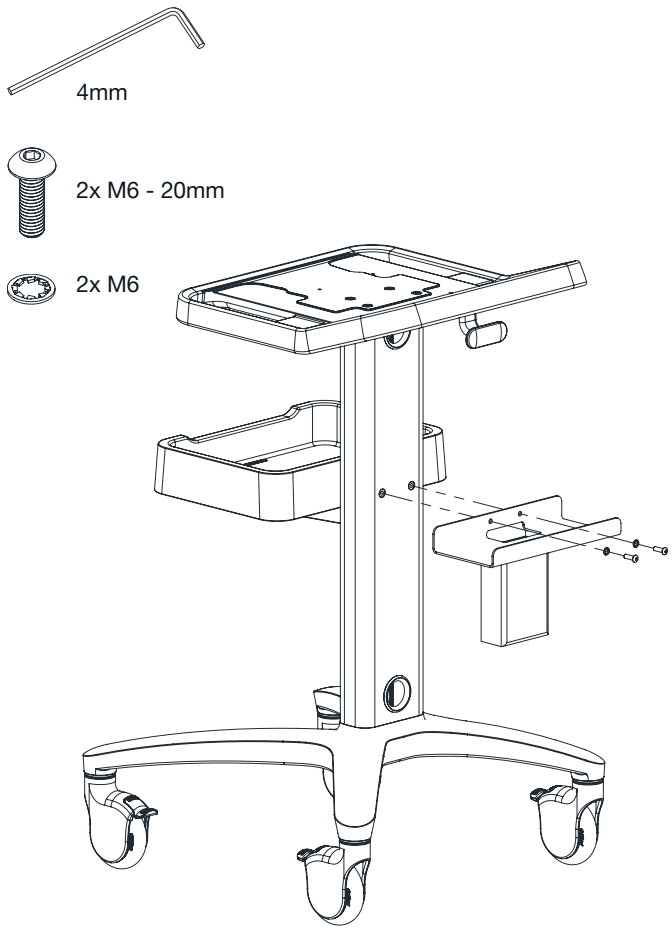

3

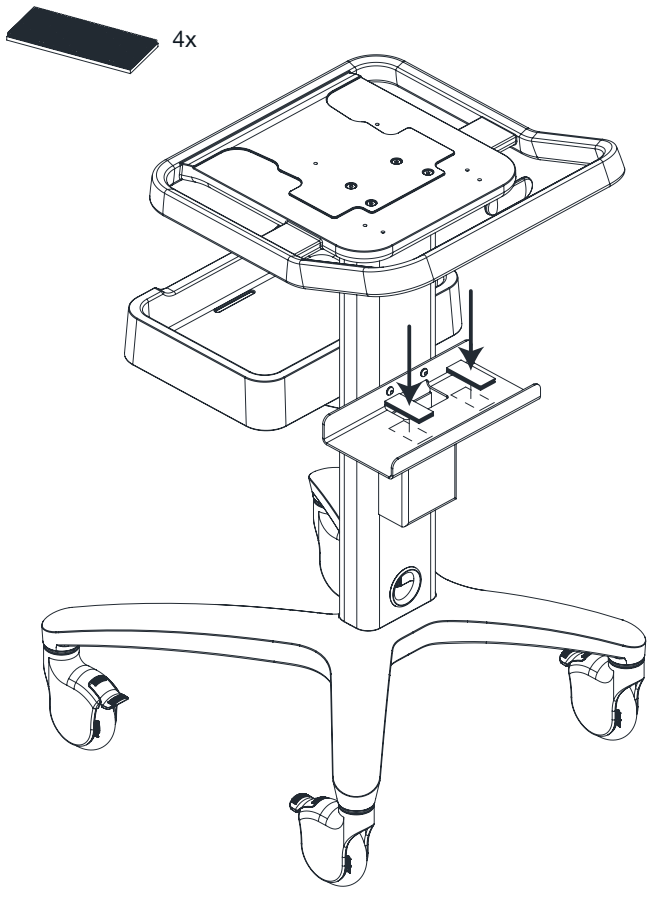

4

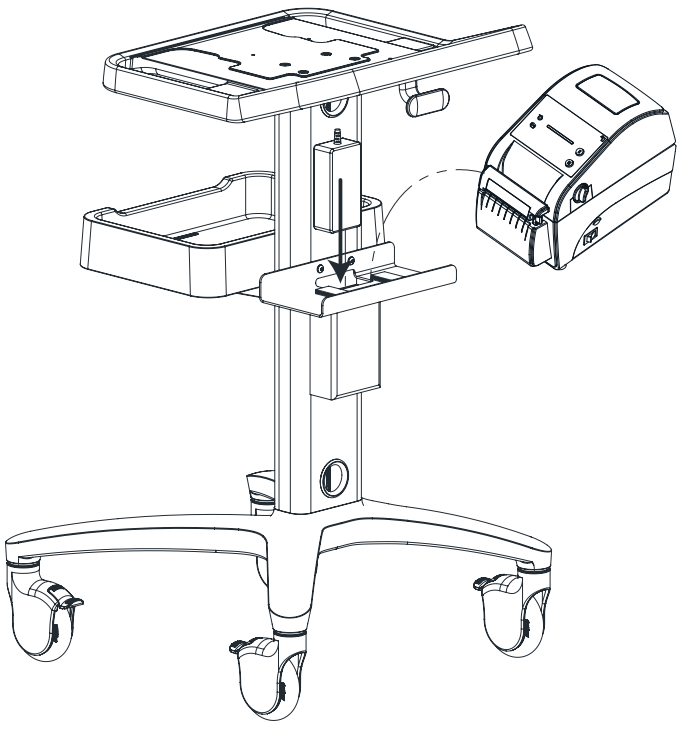

5

